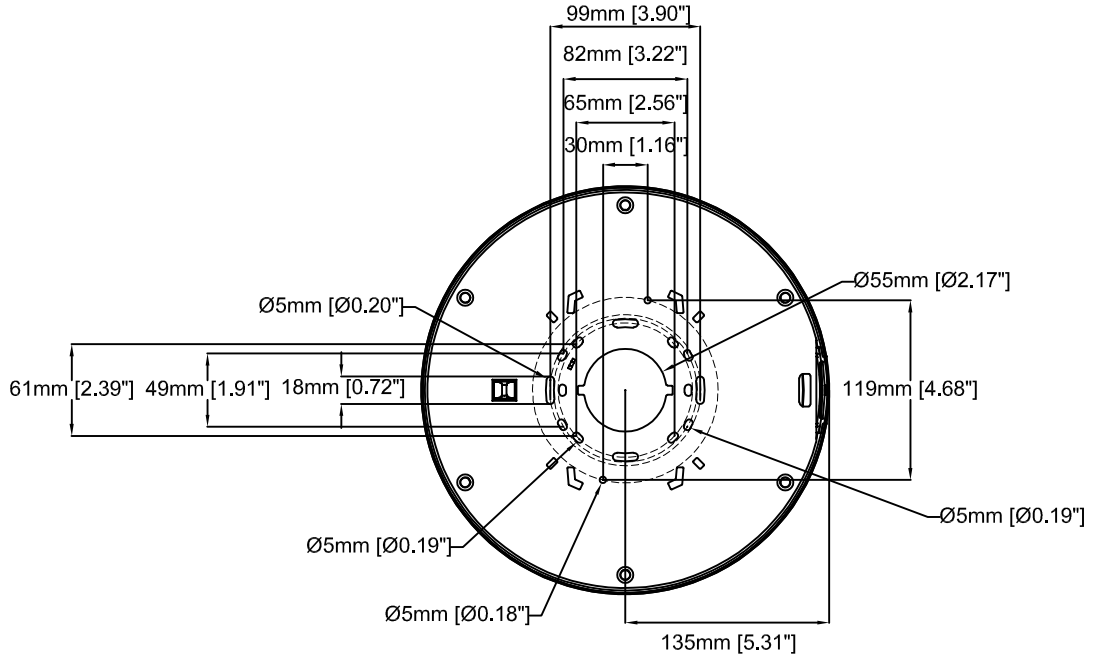

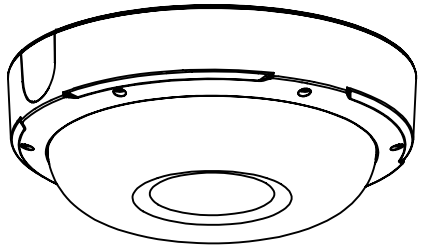

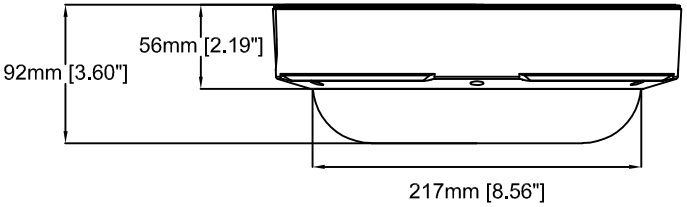

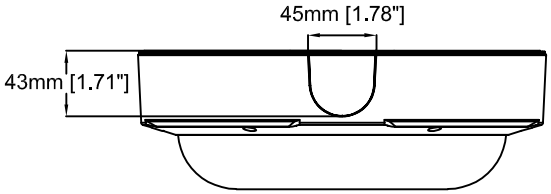

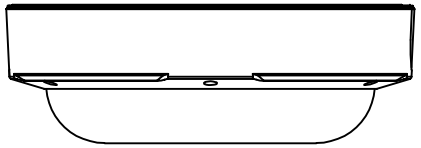

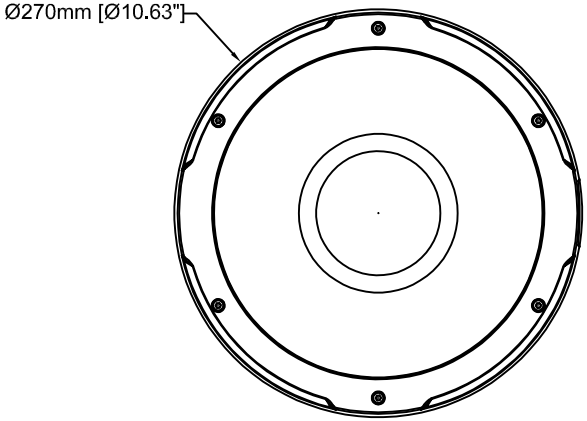

AXIS P3707-PE Network Camera

Revision	v.02	Revision date	2017-07-18
Paper size	A4	Release date	2016-01-22
Created by	JOT/GAB	Scale	1:5

© 2017 Axis Communications